ROLLERS
SERIES 3950
Heavy-duty conveyor roller

Application area
Driven unit handling conveying of heavy materials, such as transport of containers, barrels, wheels, pallets or steel containers.

Robust construction
Fixed drive conveyor roller with a particularly stable, robust construction. The sprockets are made of steel and are permanently welded.

Numerous drive types
Numerous sprocket heads are available. Chains from roller to roller or tangential chain drives can optionally be used.

Lateral loading
The tube ends are rounded, thereby allowing materials to be easily moved on from the side. Axial forces are removed through ball bearings and seals.







© 01 | 2026 Interroll

Technical data

General technical data		
Platform	1450	1450
Max. load capacity	5000 N	2500 N
Max. conveyor speed	0.5 m/s	0.5 m/s
Anti-static version	Yes (via sprocket head)	Yes (via sprocket head)
Temperature range	−5 to +40 °C	−30 to +40 °C
Material		
Tube	Zinc-plated steel, stainless steel	Zinc-plated steel, stainless steel
Shaft	Uncoated steel, zinc-plated steel, stainless steel	Uncoated steel, zinc-plated steel, stainless steel
Bearing housing	Polyamide, RAL9005 (jet black)	Zinc-plated steel
Drive head	Uncoated steel (the sprocket heads including tube are zinc-plated after welding them on), stainless steel	Uncoated steel (the sprocket heads including tube are zinc-plated after welding them on), stainless steel
Seal Drive side	Polyamide, RAL1021 (rape yellow)	Polyamide, RAL1021 (rape yellow)/steel
Seal on non-driven side	Polyamide, RAL1021 (rape yellow)	Zinc-plated steel
Bearing version	Precision steel ball bearing 6205 2RZ, bearing play C3, greased	Precision steel ball bearing 6205 2RZ, bearing play C3 and 6204 1Z, greased

For zinc-plated design, the tube assembly is zinc-plated by component after welding on the sprocket head.

Design versions

Tube sleeves	For tube with Ø 80 x 2 mm with sprocket head with 15 teeth: PVC sleeve (page 23) Lagging (page 26)
Anti-static version	(< 10^6 Ω) Standard design for rollers with tube sleeves
Tube	The following are available in addition to the variants listed in the load capacity tables: • With flanges welded on

Load capacities of series 3950

The load capacity table refers to a temperature range of +5 to +40 °C.
Valid for the following shaft designs: female thread or male thread.

Bearing: 6205 2RZ.

Tube material	Ø Tube/ thickness [mm]	Drive element	Ø Shaft [mm]	Maximum static load [N] for installation length [mm]							
				200	400	600	800	1000	1200	1400	1600
Steel	80 x 2	Welded steel sprocket head 5/8", T15 and T18	20	5000	5000	5000	5000	5000	4340	3170	2420
		Welded steel double sprocket head 5/8", T15 and T18		5000	5000	5000	5000	5000	4340	3170	2420
Steel	80 x 3	Welded steel sprocket head 5/8", T15 and T18	20	5000	5000	5000	5000	5000	5000	4580	3490
		Welded steel double sprocket head 5/8", T15 and T18		5000	5000	5000	5000	5000	5000	4580	3490
Steel	89 x 3	Welded steel sprocket head 5/8", T15 and T18	20	5000	5000	5000	5000	5000	5000	5000	4865
		Welded steel double sprocket head 5/8", T15 and T18		5000	5000	5000	5000	5000	5000	5000	4865

T = Number of teeth

© 01 | 2026 Interroll

Load capacities of series 3950 deep freeze design

The following load capacity table refers to a temperature range of −30 to +40 °C.

Tube material	Ø Tube/ thickness [mm]	Drive element	Ø Shaft [mm]	Maximum static load [N] for installation length [mm]							
				200	400	600	800	1000	1200	1400	1600
Steel	80 x 2	Welded steel sprocket head 5/8", T15 and T18	20	2500	2500	2500	2500	2500	2170	1585	1210
		Welded steel double sprocket head 5/8", T15 and T18		2500	2500	2500	2500	2500	2170	1585	1210
Steel	80 x 3	Welded steel sprocket head 5/8", T15 and T18	20	2500	2500	2500	2500	2500	2500	2290	1745
		Welded steel double sprocket head 5/8", T15 and T18		2500	2500	2500	2500	2500	2500	2290	1745
Steel	89 x 3	Welded steel sprocket head 5/8", T15 and T18	20	2500	2500	2500	2500	2500	2500	2500	2432.5
		Welded steel double sprocket head 5/8", T15 and T18		2500	2500	2500	2500	2500	2500	2500	2432.5

T = Number of teeth

Dimensions

The dimensions of the conveyor roller depend on the shaft version. A sufficient axial play is already taken into account, so that only the actual lane width between side profiles is required for ordering.
Ordering dimensions for tube sleeves, e.g. PVC sleeves, see page 24, and for flanges see page 27.

RL = Reference length/ordering length
EL = Installation length, inside diameter between side profiles
AGL = Total length of shaft
U = Usable tube length: Length without bearing housing and for flanged metal tube without length of flanging

Ø Tube [mm]	Tube material	Ø Shaft [mm]	Drive element	EL [mm]	AGL [mm]	U [mm]
80 x 2; 80 x 3; 89 x 3	Steel	20	Welded steel sprocket head 5/8", T15 and T18	RL + 36	RL + 36	RL − 23
			Welded steel double sprocket head 5/8", T15 and T18	RL + 62	RL + 62	

T = Number of teeth

© 01 | 2026 Interroll

Welded 5/8" steel sprocket head with 15 teeth

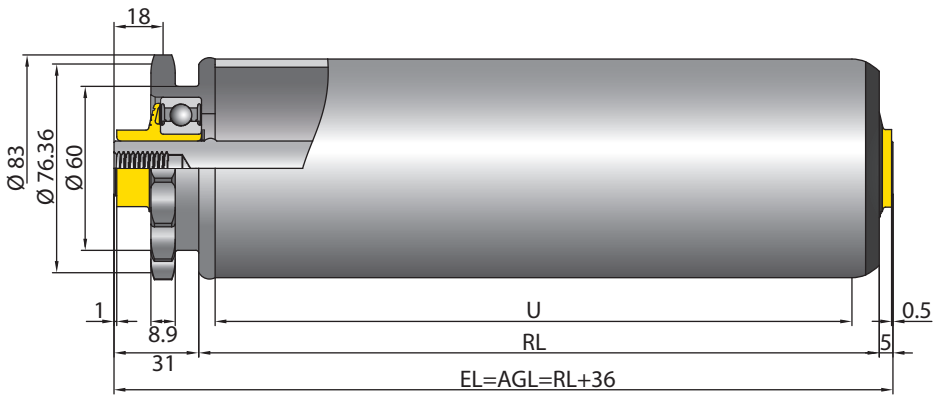

Welded 5/8" steel double sprocket head with 15 teeth

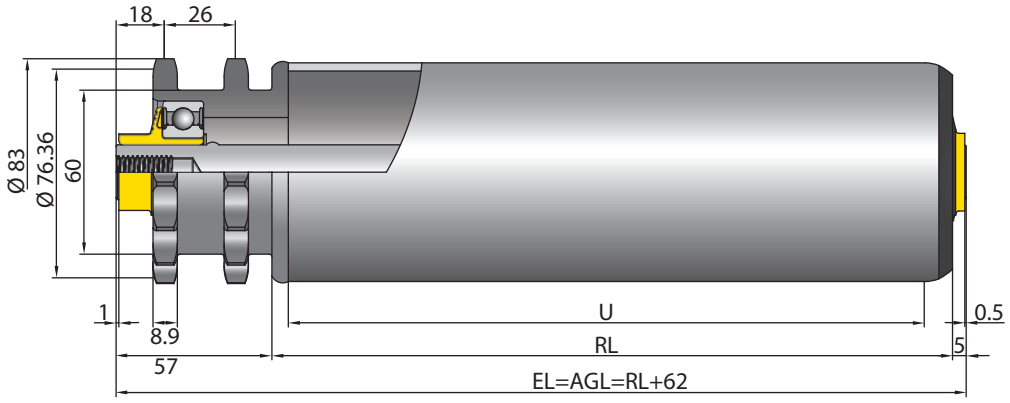

Welded 5/8" steel sprocket head with 18 teeth

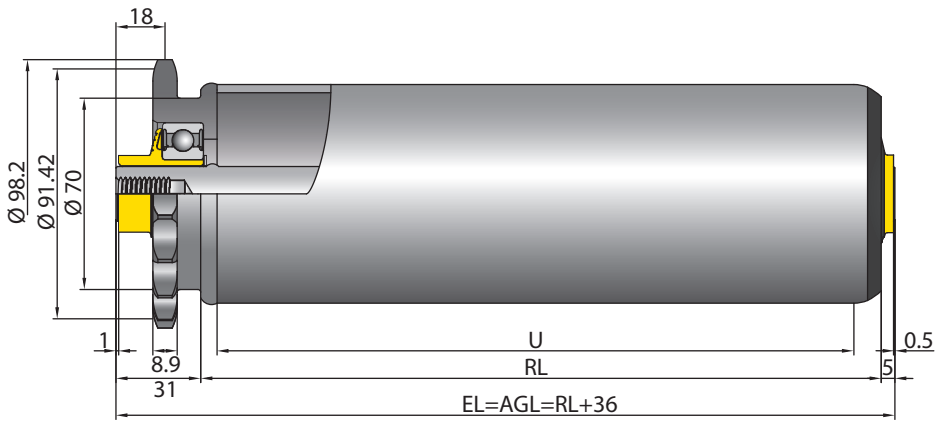

© 01 | 2026 Interroll

Welded 5/8" steel double sprocket head with 18 teeth

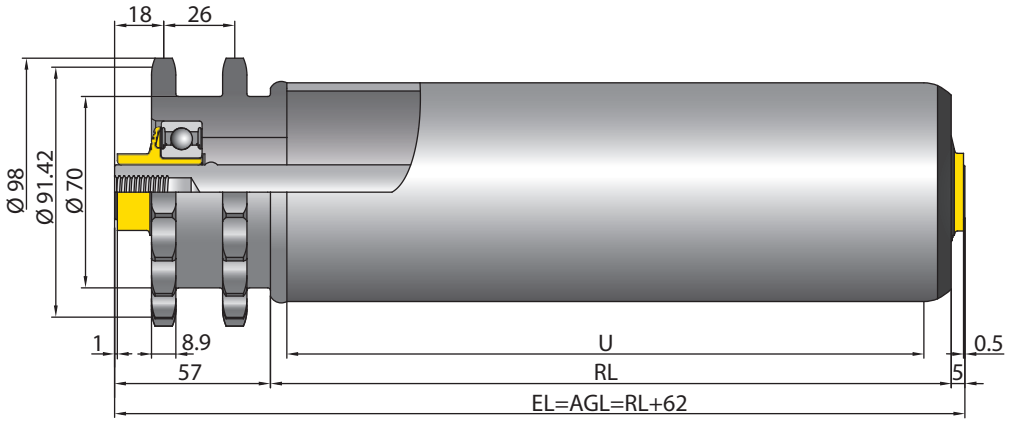

© 01 | 2026 Interroll