STANDARD SPEED CONTROLLERS
EL ≥ 152 MM

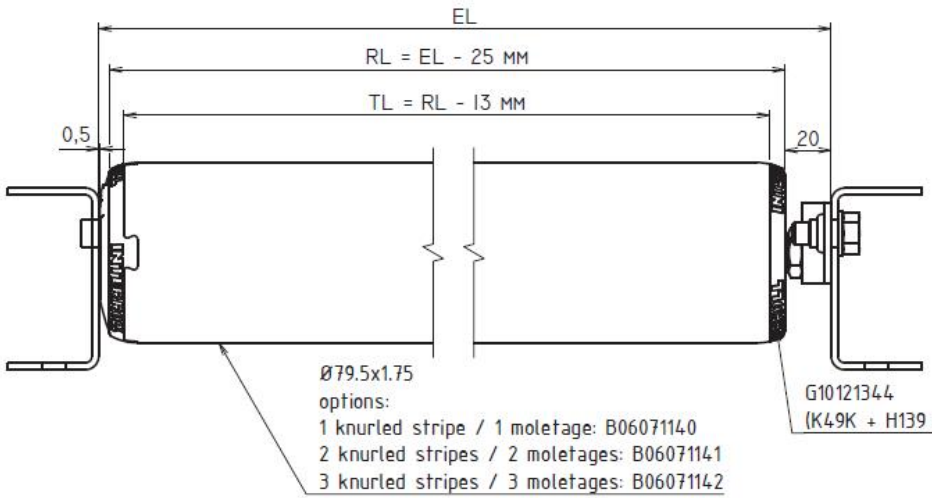

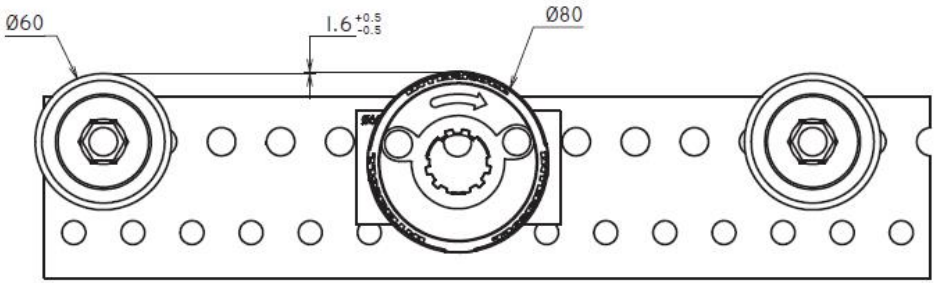

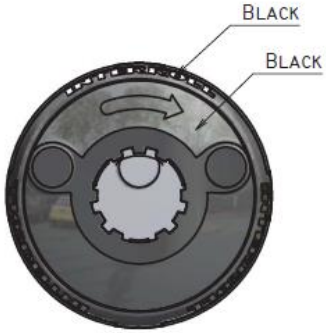

BASIC SPEED CONTROLLER
ROLLER GI3052110
CARTRIDGE BI1030350

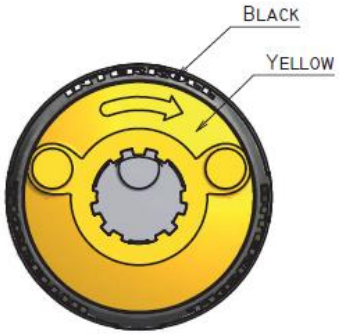

MAGNETIC SPEED CONTROLLER
ROLLER GI1031452
CARTRIDGE BI0070650

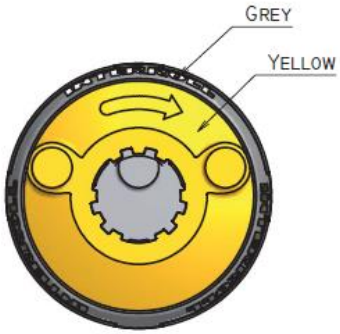

MAGNETIC SPEED CONTROLLER (DEEP FREEZE)
ROLLER GI4011771
CARTRIDGE BI3112810

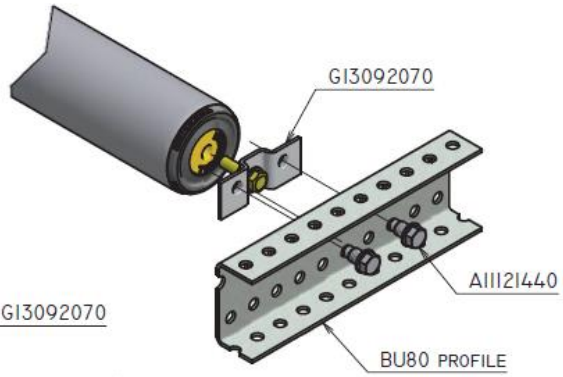

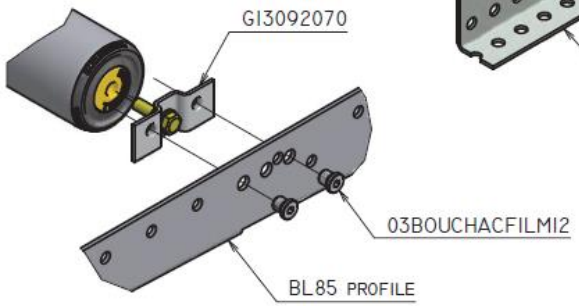

	EL Min		EL Max	LIFO	Operating temperature
	EL: 130	RT		One way function	
BASIC	Yes	152 mm	1250 mm	No	+6°C to +45°C
MSC	Yes			Yes	+6°C to +45°C
MSC DEEP FREEZE	No			Yes	-30°C to +5°C

Material				Weight	N/A
Customer			Date	Name	
		Drawn	22/01/2014	j.lermite	
Gen. tolerance	0.5 mm	Checked			
Replacing					
Description	SPEED CONTROLLERS DEFINITION EL > 152 mm			Scale	
				Format	A3
Notes				File name	B14012170_A_FR_000.dwg

INTERROLL
COPYRIGHT:
Interroll SAS
SBU Dynamic Storage
310, Rue du Clair Bocage
B.P. 255
Mouilleron le Captif
F - 85006 La Roche sur Yon

Article number
Version: A
EDM number: B14012170