Timing Pilot Bore

Heavy (H) - 1/2" (12.7 mm) pitch

H075 - 3/4" (19 mm) wide belts

Product	Type	De	Dp	Df	Dm	F	L	d
14-H-075	S3F	55	56.59	64	40	25.5	40	12
15-H-075	S3F	59	60.64	70	45	25.5	40	12
16-H-075	S3F	63	64.67	70	45	25.5	40	12
17-H-075	S3F	67	68.72	75	45	25.5	40	12
18-H-075	S3F	71	72.77	79	55	25.5	40	12
19-H-075	S3F	75	76.81	83	60	25.5	40	12
20-H-075	S3F	79	80.85	86	62	25.5	40	12
21-H-075	S3F	84	84.89	91	65	25.5	40	12
22-H-075	S3F	88	88.93	94	68	25.5	40	12
23-H-075	S3F	92	92.98	97	72	25.5	40	12
24-H-075	S3F	96	97.03	102	72	25.5	40	12
25-H-075	S3F	100	101.06	106	72	25.5	40	12
26-H-075	S3F	104	105.11	112	80	25.5	40	12
27-H-075	S3F	108	109.15	115	80	25.5	40	12
28-H-075	S3F	112	113.18	120	80	25.5	40	12
30-H-075	S3F	112	121.29	128	80	25.5	40	12
32-H-075	S3F	128	129.30	135	80	25.5	40	12
33-H-075	S3F	132	133.40	142	80	25.5	40	12
34-H-075	S3F	136	137.45	150	80	25.5	40	12
35-H-075	S3F	140	141.49	150	80	25.5	40	12
36-H-075	S3F	144	145.54	150	80	25.5	40	12
38-H-075	S3F	152	153.62	158	80	25.5	40	12
40-H-075	S3F	160	161.70	168	80	25.5	40	12
42-H-075	S3F	168	169.79	184	80	25.5	40	12
44-H-075	A3	177	177.88	-	80	25.5	40	14
48-H-075	A3	193	194.03	-	90	25.5	45	14
50-H-075	A3	201	202.13	-	90	25.5	45	14

H100 - 1" (25 mm) wide belts

Product	Type	De	Dp	Df	Dm	F	L	d
14-H-100	S3F	55	56.59	64	40	32	45	12
15-H-100	S3F	59	60.64	70	45	32	45	12
16-H-100	S3F	63	64.67	70	45	32	45	12
17-H-100	S3F	67	68.72	75	45	32	45	12
18-H-100	S3F	71	72.77	79	55	32	45	12
19-H-100	S3F	75	76.81	83	60	32	45	14
20-H-100	S3F	79	80.85	86	62	32	45	14
21-H-100	S3F	84	84.89	91	65	32	45	14
22-H-100	S3F	88	88.93	94	68	32	45	14
23-H-100	S3F	92	92.98	97	72	32	45	14
24-H-100	S3F	96	97.03	102	72	32	45	14
25-H-100	S3F	100	101.06	106	72	32	45	14
26-H-100	S3F	104	105.11	112	80	32	45	14
27-H-100	S3F	108	109.15	115	80	32	45	14
28-H-100	S3F	112	113.18	120	80	32	45	14
29-H-100	S3F	116	117.23	120	80	32	45	14
30-H-100	S3F	120	121.29	128	80	32	45	14
32-H-100	S3F	128	129.30	135	80	32	45	14
33-H-100	S3F	132	133.40	142	80	32	45	14
34-H-100	S3F	136	137.45	150	80	32	45	14
35-H-100	S3F	140	141.49	150	80	32	45	14
36-H-100	S3F	144	145.54	150	80	32	45	14
38-H-100	S3F	152	153.62	158	80	32	45	14
40-H-100	S3F	160	161.70	168	80	32	45	14
42-H-100	S3F	168	169.79	184	80	32	45	14
44-H-100	A3F	177	177.88	184	80	32	50	14
45-H-100	A3F	181	181.91	192	80	32	50	14
48-H-100	A3F	193	194.03	200	90	32	50	14
50-H-100	A3	201	202.13	-	90	32	50	20
52-H-100	A3	209	210.21	-	90	32	50	20
57-H-100	A3	229	230.42	-	90	32	50	20
58-H-100	A3	233	234.47	-	90	32	50	20
60-H-100	A3	241	242.55	-	120	32	50	20
68-H-100	A3	274	274.90	-	120	32	55	20
70-H-100	A3	282	282.98	-	120	32	55	20
72-H-100	A3	290	291.06	-	120	32	55	20
84-H-100	A3	338	339.57	-	120	32	55	20
96-H-100	A3	387	388.09	-	120	32	60	20
120-H-100	A3	484	485.12	-	120	32	60	20
156-H-100	A3	629	630.64	-	120	32	60	20

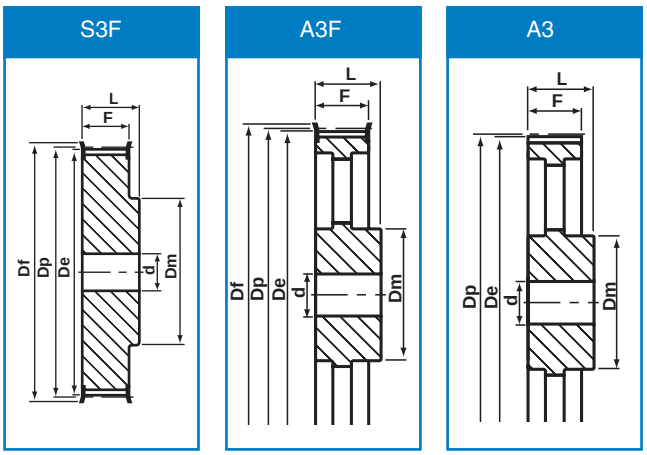

All dimensions in millimetres unless otherwise stated. Every effort has been taken to ensure that the data listed in this catalogue is correct. Challenge accepts no liability for any inaccuracies or damage caused

Timing Pilot Bore

Heavy (H) - 1/2" (12.7 mm) pitch

H150 - 1.1/2" (38 mm) wide belts

Product	Type	De	Dp	Df	Dm	F	L	d
14-H-150	S3F	55	56.59	64	42	46	58	20
15-H-150	S3F	59	60.64	70	45	46	58	20
16-H-150	S3F	63	64.67	70	45	46	58	20
17-H-150	S3F	67	68.72	75	45	46	58	20
18-H-150	S3F	71	72.77	79	55	46	58	20
19-H-150	S3F	75	76.81	82	60	46	58	20
20-H-150	S3F	79	80.85	86	62	46	58	20
21-H-150	S3F	84	84.89	91	65	46	58	20
22-H-150	S3F	88	88.93	94	68	46	58	20
23-H-150	S3F	92	92.98	97	72	46	58	20
24-H-150	S3F	96	97.03	102	72	46	58	20
25-H-150	S3F	100	101.06	106	72	46	58	20
26-H-150	S3F	104	105.11	112	80	46	58	20
27-H-150	S3F	108	109.15	115	80	46	58	20
28-H-150	S3F	112	113.18	120	80	46	58	20
29-H-150	S3F	116	117.23	120	80	46	58	20
30-H-150	S3F	120	121.29	128	80	46	58	20
32-H-150	S3F	128	129.30	135	80	46	58	20
33-H-150	S3F	132	133.40	142	80	46	58	20
34-H-150	S3F	136	137.45	150	80	46	58	20
35-H-150	S3F	140	141.49	150	80	46	58	20
36-H-150	S3F	144	145.54	150	80	46	58	20
38-H-150	S3F	152	153.62	158	80	46	58	20
40-H-150	S3F	160	161.70	168	80	46	58	20
42-H-150	S3F	168	169.79	184	80	46	58	20
45-H-150	A3F	181	181.91	192	80	46	58	20
48-H-150	A3F	193	194.03	200	90	46	58	20
50-H-150	A3	201	202.13	-	90	46	65	20
52-H-150	A3	209	210.21	-	90	46	65	20
57-H-150	A3	229	230.43	-	90	46	65	20
58-H-150	A3	233	234.47	-	90	46	65	20
60-H-150	A3	241	242.55	-	120	46	65	20
68-H-150	A3	274	274.91	-	120	46	65	25
70-H-150	A3	281	282.98	-	120	46	65	25
72-H-150	A3	290	291.06	-	120	46	65	25
84-H-150	A3	338	339.57	-	120	46	65	25
96-H-150	A3	387	388.09	-	120	46	65	25
120-H-150	A3	484	485.12	-	120	46	65	25
156-H-100	A3	629	630.64	-	120	46	65	25

H200 - 2" (51 mm) wide belts

Product	Type	De	Dp	Df	Dm	F	L	d
14-H-200	S3F	55	56.59	64	42	58	70	20
15-H-200	S3F	59	60.64	70	45	58	70	20
16-H-200	S3F	63	64.67	70	45	58	70	20
17-H-200	S3F	67	68.72	75	45	58	70	20
18-H-200	S3F	71	72.77	79	55	58	70	20
19-H-200	S3F	75	76.81	82	60	58	70	20
20-H-200	S3F	79	80.85	86	62	58	70	20
21-H-200	S3F	84	84.89	91	65	58	70	20
22-H-200	S3F	88	88.93	94	68	58	70	20
23-H-200	S3F	92	92.98	97	72	58	70	20
24-H-200	S3F	96	97.03	102	72	58	70	20
25-H-200	S3F	100	101.06	106	72	58	70	20
26-H-200	S3F	104	105.11	112	80	58	70	20
27-H-200	S3F	108	109.15	115	80	58	70	20
28-H-200	S3F	112	113.18	120	80	58	70	20
29-H-200	S3F	116	117.23	120	80	58	70	20
30-H-200	S3F	120	121.29	128	80	58	70	20
32-H-200	S3F	128	129.30	135	80	58	70	20
33-H-200	S3F	132	133.40	142	80	58	70	20
34-H-200	S3F	136	137.45	150	80	58	70	20
35-H-200	S3F	140	141.49	150	80	58	70	20
36-H-200	S3F	144	145.54	150	80	58	70	20
38-H-200	S3F	152	153.62	158	80	58	70	20
40-H-200	S3F	160	161.70	168	80	58	70	20
42-H-200	S3F	168	169.79	184	80	58	70	20
44-H-200	A3F	177	177.88	184	80	58	70	20
45-H-200	A3F	181	181.91	192	80	58	70	20
48-H-200	A3F	193	194.03	200	90	58	75	25
50-H-200	A3	201	202.13	-	90	58	75	25
52-H-200	A3	209	210.21	-	90	58	75	25
57-H-200	A3	229	230.42	-	90	58	75	25
58-H-200	A3	233	234.47	-	90	58	75	25
60-H-200	A3	241	242.55	-	120	58	75	25
68-H-200	A3	274	274.90	-	120	58	75	28
70-H-200	A3	282	282.98	-	120	58	75	28
72-H-200	A3	290	291.06	-	120	58	75	28
84-H-200	A3	338	339.57	-	120	58	75	28
96-H-200	A3	387	388.09	-	120	58	75	28
120-H-200	A3	484	485.12	-	120	58	75	28
156-H-100	A3	629	630.64	-	120	58	75	28

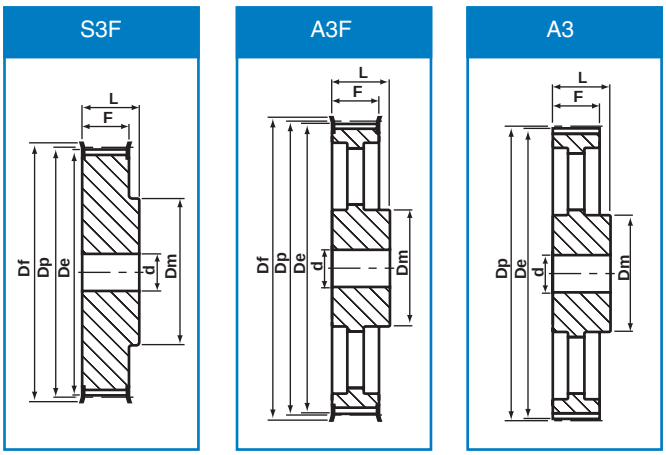

Every effort has been taken to ensure that the data listed in this catalogue is correct. Challenge accepts no liability for any inaccuracies or damage caused

All dimensions in millimetres unless otherwise stated.

Timing Pilot Bore

Heavy (H) - 1/2" (12.7 mm) pitch

H300 - 3" (76 mm) wide belts

Product	Type	De	Dp	Df	Dm	F	L	d
14-H-300	S3F	55	56.59	64	42	86	100	20
15-H-300	S3F	59	60.64	70	45	86	100	20
16-H-300	S3F	63	64.67	70	45	86	100	20
17-H-300	S3F	67	68.72	75	45	86	100	20
18-H-300	S3F	71	72.77	79	55	86	100	20
19-H-300	S3F	75	76.81	83	60	86	100	20
20-H-300	S3F	79	80.85	86	62	86	100	20
21-H-300	S3F	84	84.89	91	65	86	100	20
22-H-300	S3F	88	88.93	94	68	86	100	20
23-H-300	S3F	92	92.98	97	72	86	100	20
24-H-300	S3F	96	97.03	102	72	86	100	20
25-H-300	S3F	100	101.06	106	72	86	100	20
26-H-300	S3F	104	105.11	112	80	86	100	20
27-H-300	S3F	108	109.15	115	80	86	100	20
28-H-300	S3F	112	113.18	120	80	86	100	20
30-H-300	S3F	120	121.29	128	80	86	100	20
32-H-300	S3F	128	129.30	135	80	86	100	20
33-H-300	S3F	132	133.40	142	80	86	100	20
34-H-300	S3F	136	137.45	150	80	86	100	20
35-H-300	S3F	140	141.49	150	80	86	100	25
36-H-300	S3F	144	145.54	150	80	86	100	25
38-H-300	S3F	152	153.62	158	80	86	100	25
40-H-300	S3F	160	161.70	168	80	86	100	25
42-H-300	S3F	168	169.79	184	80	86	100	25
44-H-300	A3	177	177.88	-	90	86	100	25
45-H-300	A3	181	181.91	-	90	86	100	25
48-H-300	A3	193	194.03	-	90	86	100	25
50-H-300	A3	201	202.13	-	90	86	100	25
52-H-300	A3	209	210.21	-	90	86	100	25
57-H-300	A3	229	230.47	-	90	86	100	25
58-H-300	A3	233	234.47	-	90	86	100	25
60-H-300	A3	241	242.55	-	120	86	100	25
70-H-300	A3	282	282.98	-	120	86	100	30
72-H-300	A3	290	291.06	-	120	86	100	30
84-H-300	A3	338	339.57	-	120	86	100	30
96-H-300	A3	387	388.09	-	120	86	100	30
120-H-300	A3	484	485.12	-	120	86	100	30
150-H-300	A3	605	606.38	-	120	86	100	30
156-H-300	A3	629	630.64	-	120	86	100	30

S3F

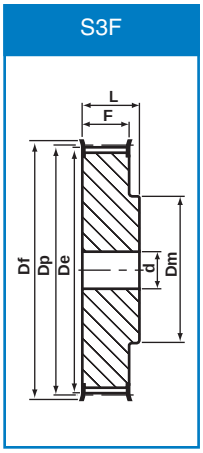

A3

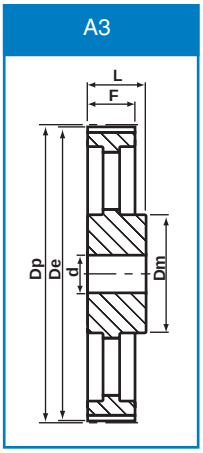

All dimensions in millimetres unless otherwise stated. Every effort has been taken to ensure that the data listed in this catalogue is correct. Challenge accepts no liability for any inaccuracies or damage caused