REXNORD

• **Assembly** of Part. S0618

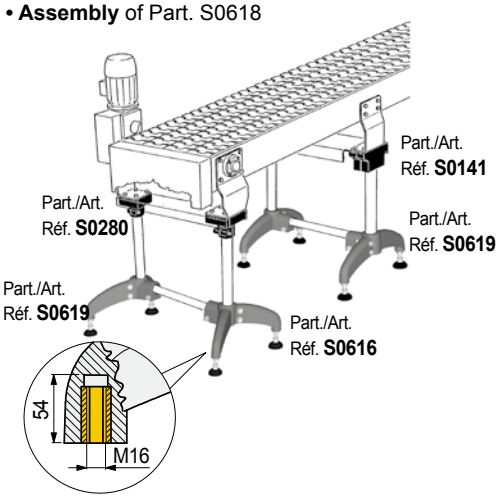

Detail of the insert for the levelers.

• **Sliding load**

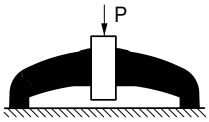

P = 8000 N.

• **Max applicable load**

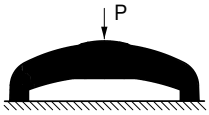

P = 8000 N.

• **Deflection**

Part. S0616 offers a better rigidity than Part. S0619

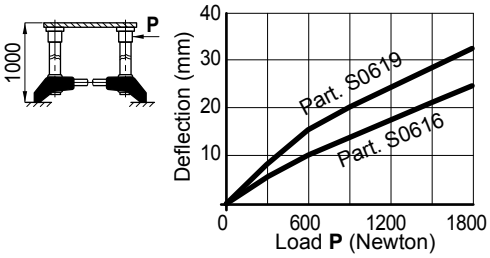

Tests performed at tightening torque: 3,6 Kgm

• **Types of levelers that can be used**

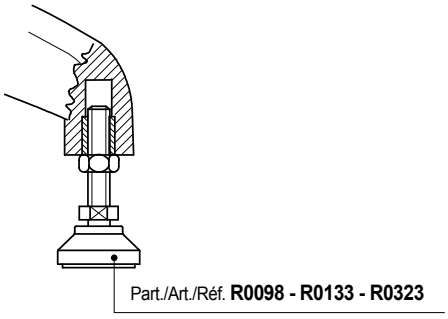

Support base (bipod)

Part. S0616

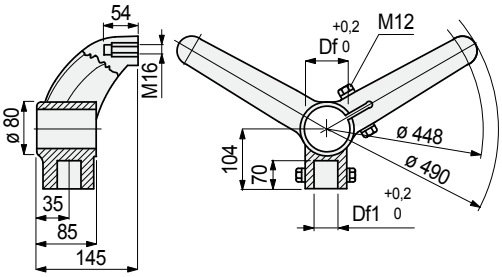

For round tubes

Vertical tube dia. mm	Horizontal tube dia. mm	Bore dia. Df mm	Bore dia. Df1 mm	Code
Bolts in austenitic stainless steel				
48,3 (1"½)	**42,4** (1"¼)	48,3	42,4	**624492**
48,3(1"½)	**48,3** (1"½)	48,3	48,3	**611203**

- Material: support base in reinforced polyamide PA FV (black), brass threaded bushings.
- Weight: 1,05 Kg.
- Max recommended tightening torque: 3,6 Kgm.
- Packaging: 4 pieces.