Guide - Rail Clamps

for round steel Rods

• **Assembly** of Part. S0478
It is possible an inclination of 2° of the guide rail.

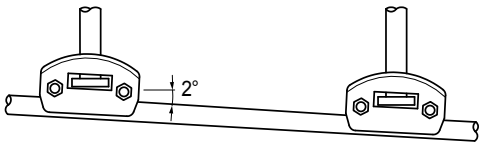

Recommended for inclined conveyors (with any angle).

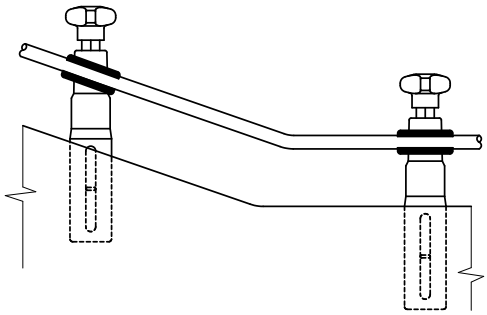

• **Pin dimensions** for Part. S0478

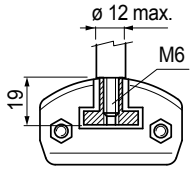

• **Assembly** of Part. S0159 - S0437
PET bottle movement
(subject to swelling).

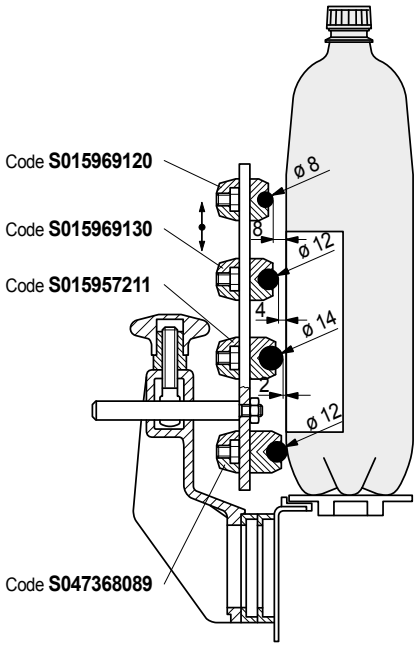

Pivoting guide-rail clamp

Part. S0478

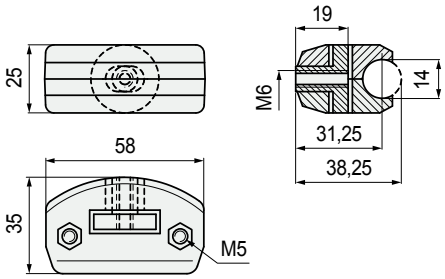

Pivoting

Code	Weight kg
670151	0,06

- Material: guide rail clamp in reinforced polyamide PA FV (black).
  Insert in brass. Bolts in austenitic stainless steel.
  Nuts in nickel plated brass.
- Packaging: 50 pieces.

Adjustable guide-rail clamp

Part. S0159
Part. S0437

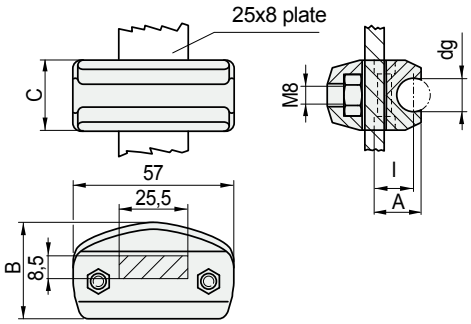

For 25 x 8 plates

Guide dia. dg mm	I mm	A mm	B mm	C mm	Code	Weight kg
8	12	15,5	32,5	21	S015969120	
10	12	15,8	32,5	21	S0159622381	
12	14	17,8	35	25	**S015969130**	0,05
14	15	19,5	35	25	S015957211	
12	18	22	41	25	**S043768089**	

- Material: guide rail clamp in reinforced polyamide PA FV (black).
  Bolts in austenitic stainless steel. Nuts in nickel plated brass.
- Packaging: 50 pieces.

Adjustable guide-rail clamp

Part. S0451

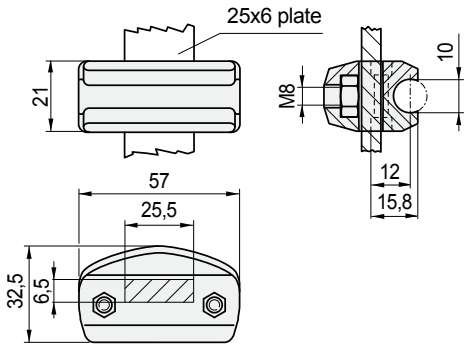

Per piatti 25 x 6

Code	Weight kg
63389	0,05

- Material: guide rail clamps in reinforced polyamide PA FV (black).
  Bolt in austenitic stainless steel. Nut in nickel plated brass.
- Packaging: 50 pieces.

Best Seller
Standard
On request: minimum quantity may apply. Consult our Customer Service for availability.

Item code for order = Part. + Code